Deck valve anti-clockwise closing cold - Brushed Dark Platinum

CL.1

20 004 716 Product version from 6/1/2015

Fits: CL.1, CYO

- hole diameter 32 mm
- rosette 60 x 47 mm
- with cold marking

Brushed Dark Platinum	20 004 716-99
Chrome	20 004 716-00
Brushed Platinum	20 004 716-06
Brushed Champagne (22kt Gold)	20 004 716-46
Champagne (22kt Gold)	20 004 716-47

Deck valve anti-clockwise closing cold - Brushed Dark Platinum

CL.1

20 004 716 Product version from 6/1/2015

mm [inches]

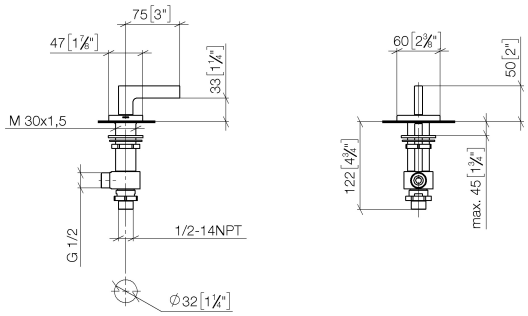

Flow rate chart

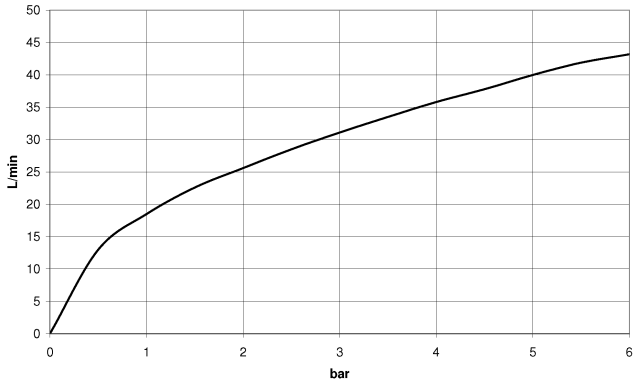

Codes & Standards

DIN 4109	ISO 3822	NSF372	NSF61

Ü-Zeichen

Certificates

IAPMO_N-4 LGA_28 IAPMO_6

Deck valve anti-clockwise closing cold - Brushed Dark Platinum

CL.1

20 004 716 Product version from 6/1/2015

Parts for other
finishes can be found
here: Chrome

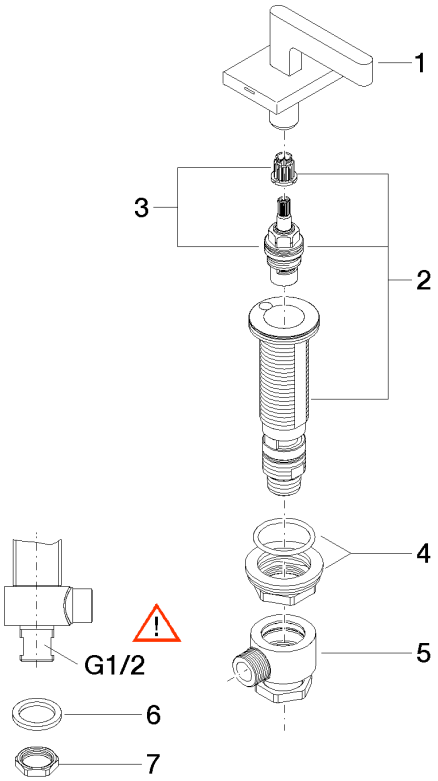

Spare parts list

No.	Item Number	Name	Quantity used	Delivery time
1	90 20 70 057 03-99	handle (cold)	1	30
2	04 17 11 058 52 90	side panel	1	2
3	90 90 03 152 00 90	top	1	2
4	04 23 10 032 78 90	fixing set	1	2
5	04 17 11 023 10 90	distributor	1	2
6	09 30 11 059 90	disc	1	2
7	09 23 10 012 90	nut	1	2

We reserve the right to change designs, product range and technical specifications without prior notice.
More information can be found at: www.dornbracht.com +49 (0) 2371 8899 900 mail@dornbracht.com